ITEM	QTY	PART NUMBER	DESCRIPTION
1	1	U5016537M-001	ACTUATOR, PRIME GATE
2	1	U5019106M-001	BRACKET, GATE MOUNT
3	1	U5025225M	PLATE, AUTOPRIME GATE STOP

ITEM	QTY	PART NUMBER	EXPENSE ITEMS
4	4	U6002563P_EXP	M6 STD SPRING LOCK WASHER SS
5	2	U6002762P_L_EXP	SCREW HHCS, M8x16 LW FULLTHRD SS
6	2	U6002766P_L_EXP	SCREW HHCS, M8x35 LW SS
7	4	U6002861P_EXP	"EXP" SOCKET BUTTON HEAD SCREW, M6X1 x 16.0 LG

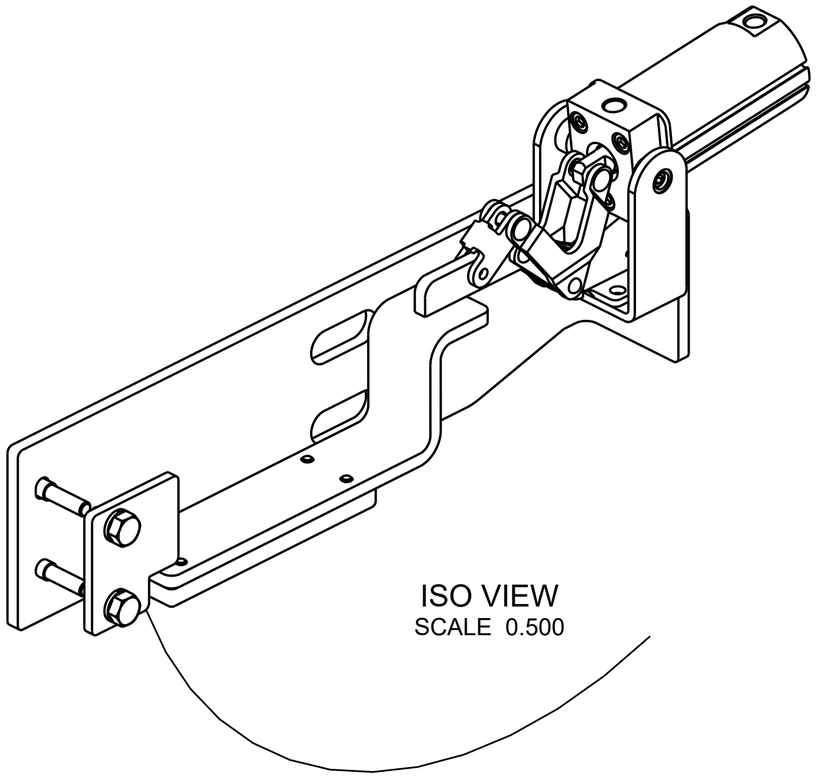

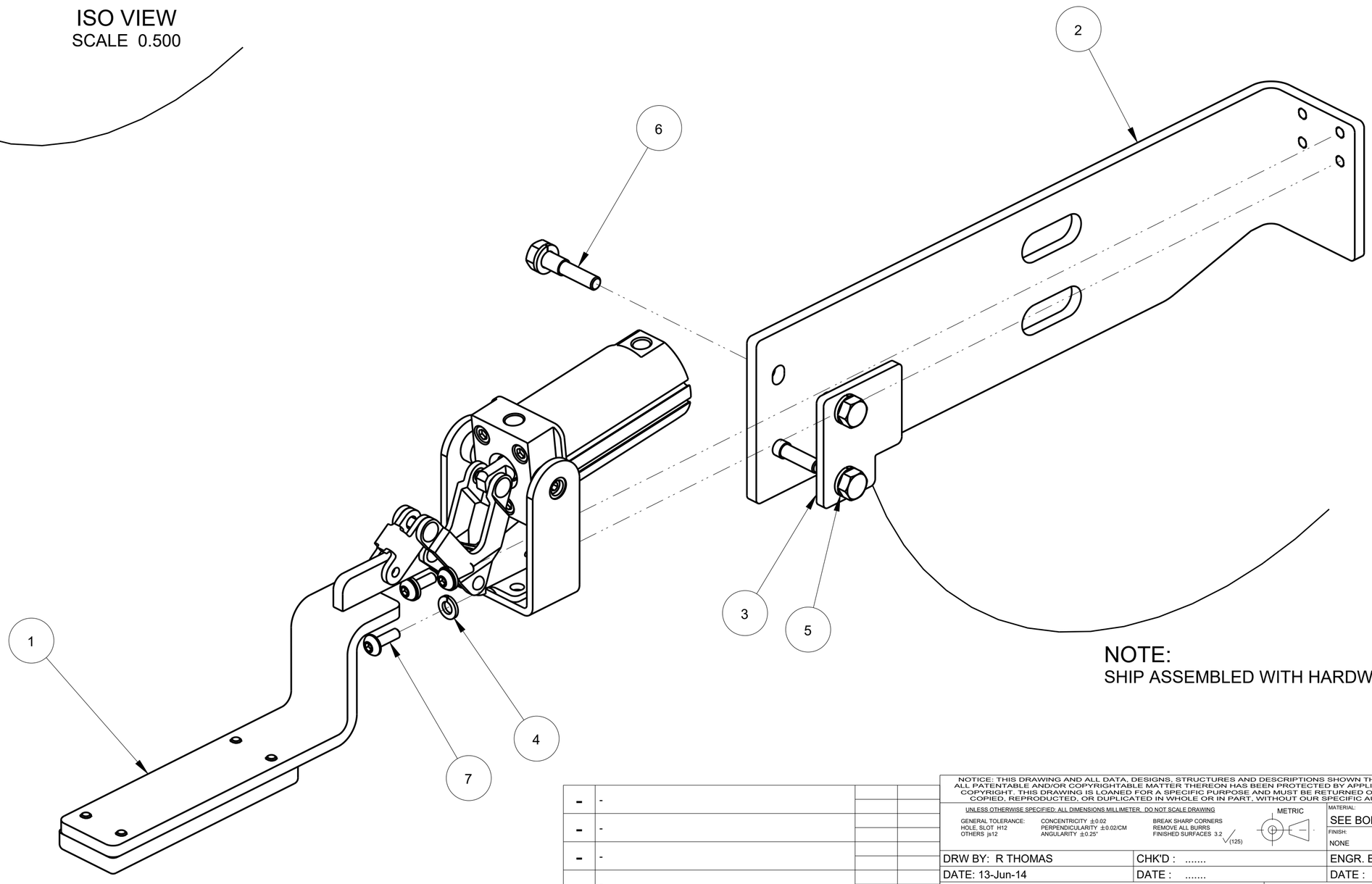

NOTE:
SHIP ASSEMBLED WITH HARDWARE

REV.	DESCRIPTION	BY	CHK'D
-	-		
-	-		
-	-		
-	-		
-	-		
		DATE	DATE

NOTICE: THIS DRAWING AND ALL DATA, DESIGNS, STRUCTURES AND DESCRIPTIONS SHOWN THEREON ARE OUR PROPERTY. ALL PATENTABLE AND/OR COPYRIGHTABLE MATTER THEREON HAS BEEN PROTECTED BY APPLICATIONS FOR PATENT AND/OR COPYRIGHT. THIS DRAWING IS LOANED FOR A SPECIFIC PURPOSE AND MUST BE RETURNED ON DEMAND. AND MAY NOT BE COPIED, REPRODUCED, OR DUPLICATED IN WHOLE OR IN PART, WITHOUT OUR SPECIFIC AUTHORIZATION IN WRITING.

UNLESS OTHERWISE SPECIFIED: ALL DIMENSIONS MILLIMETER DO NOT SCALE DRAWING

GENERAL TOLERANCE: HOLE, SLOT H12 OTHERS js12
CONCENTRICITY ±0.02 PERPENDICULARITY ±0.02/CM ANGULARITY ±0.25°
BREAK SHARP CORNERS REMOVE ALL BURRS FINISHED SURFACES 3.2 (125)

METRIC

MATERIAL: SEE BOM
FINISH: NONE

DRW BY: R THOMAS	CHK'D :	ENGR. BY : W CASH
DATE: 13-Jun-14	DATE :	DATE : .....

TITLE: ASSY, PRIME GATE 16oz

Machinery & Automation
Smyrna, Georgia

SCALE	MATERIAL CODE	DRW. SIZE	DRW. N°	REV	VER 2	SHEETS
0.625	999	C	U5019105M-001	-		1/1